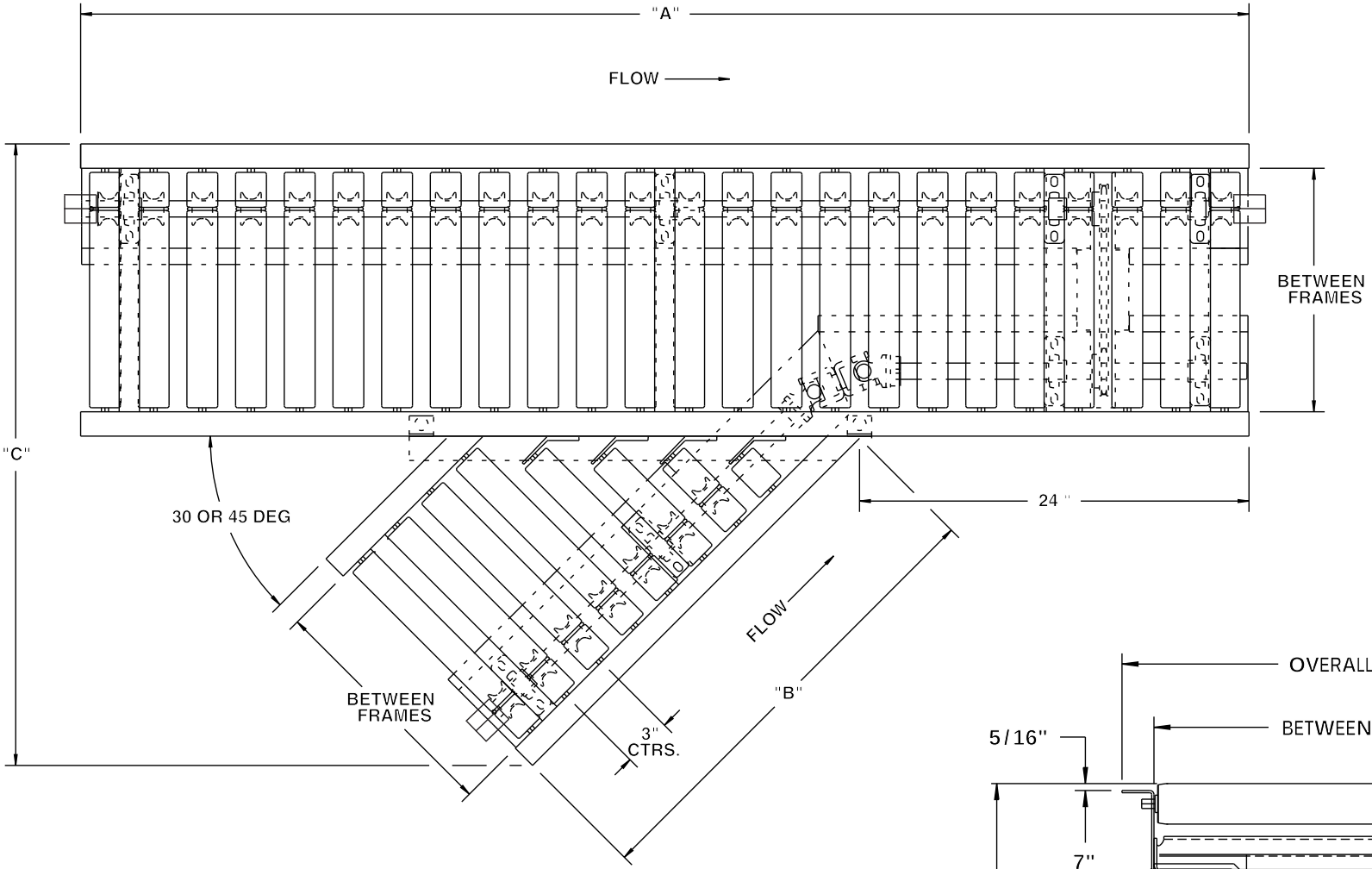
"A"
FLOW
BETWEEN FRAMES
"C"
30 OR 45 DEG
24 "
FLOW
"B"
BETWEEN FRAMES
3" CTRS.

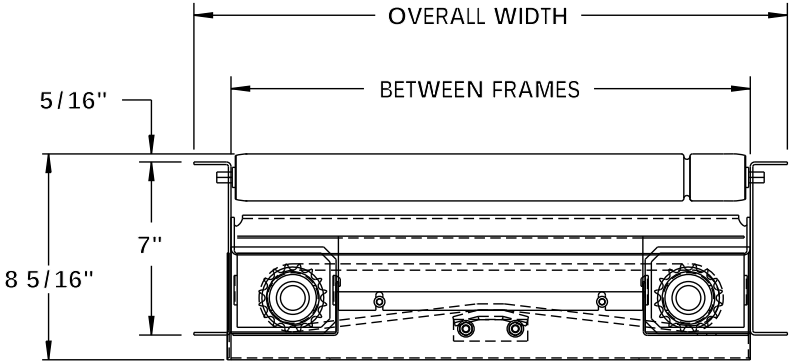
OVERALL WIDTH
BETWEEN FRAMES
5/16"
7"
8 5/16"